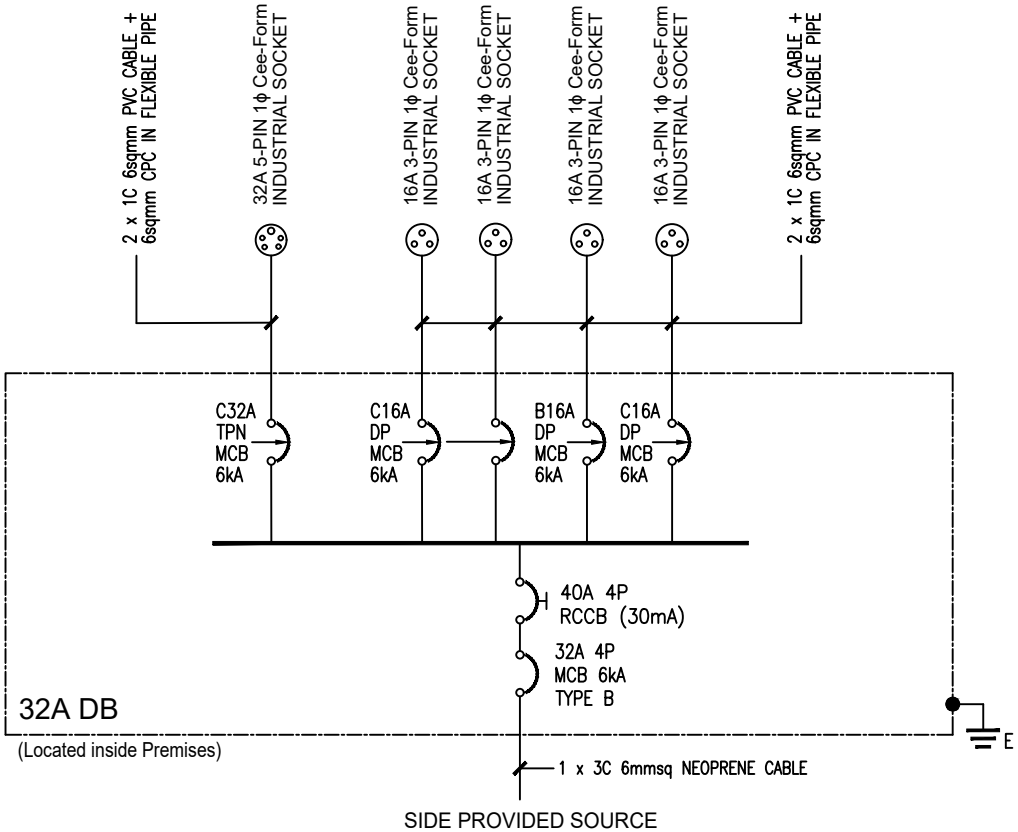

CLIENT / ADDRESS :	MAIN CONTRACTOR :	ELECTRICAL CONTRACTOR :	DRAWING TITLE :	LEW :	CHECKED :	DATE :
DGT PROFESSIONAL PTE LTD WEST MALL 1 BUKIT BATOK CENTRAL SINGAPORE 5658713 (OPPOSITE BREADTALK, OUTSIDE)			SINGLE LINE DIAGRAM (SLD)	ELECTRICAL SEOW SWEE LEONG 8/25825 SINGAPORE		5 AUG 2025
					DRAWING NO. : I2R-DGT-SLD	REV : 0